ORDNANCE EXPLOSIVES/ UNEXPLODED ORDNANCE (OE/UXO) TRAINING

January 8, 2003

Agenda

- Safety
- Terms, definitions, and safety precautions
- UXO identification
  - ✓ Small arms
  - ✓ Grenades
  - ✓ Projectiles
  - ✓ Rockets
  - ✓ Missiles
  - ✓ Bombs
  - ✓ Submunitions
  - ✓ Pyrotechnics and signal devices

Safety

- Upon discovering suspect UXO, the finder should stop and not approach any closer. Note the location, approximate size, shape, color, and any other distinguishing features such as nomenclature or writing, fins, etc. The following Basic Safety Precautions should be followed if suspect UXO is discovered.

Safety (Continued)

- **DO NOT TOUCH OR MOVE ANY PIECE OF ORDNANCE!**
  - ✓ **DO NOT** transmit on a radio within 150 feet of UXO
  - ✓ Evacuate all personnel within 300 meters of the discovered ordnance
  - ✓ **DO NOT** approach any closer or touch the suspect item
  - ✓ Warn others in the area that you have located a suspect UXO and have them leave the area immediately
  - ✓ Note the location of the UXO by taking azimuths or marking a map (your directions must be as accurate as possible so that the EOD/UXO team can find the munition by your directions)
  - ✓ Remain in the area as a guide to the UXO team - otherwise the UXO team may not find the ordnance and the hazard will still exist
  - ✓ Assist the UXO/EOD team in locating the UXO and follow their safety guidelines in terms of safe evacuation distances and other precautions
  - ✓ Retreat the way you came in (or safest path)
- **NOTE: DO NOT** disturb or move a suspected UXO for the purpose of determining the above information. Only report what you have observed. For example, it may not be possible to determine the size or color of an item without disturbing it. In this case, note what you can observe without disturbing the object and report your observations.

Terms, Definitions, and Safety Precautions

- **Ordnance and Explosives (OE)** - Ammunition, ammunition components, chemical or biological warfare material or explosives that have been abandoned, expelled from demolition pits or burn pads, lost, discarded, buried, or fired
- **Blow-In-Place (BIP)** - The use of explosives to destroy UXO in place without handling, moving, or disturbing the UXO
- **Ordnance Related Scrap (ORS)** - Construction material from ordnance, typically metal, plastic, or ceramic, that no longer contains explosive material, even residue, and no longer has the shape of an ordnance item

Terms, Definitions, and Safety Precautions (Continued)

- **Frag** - The pieces of a munition (metal, plastic, etc.) that fragment or break apart violently upon detonation and scatter causing property damage and personal injury
- **Unexploded Ordnance (UXO)** - Ordnance that has failed to function as designed but is still capable of functioning and inflicting injury or death to personnel and damage to property
- **UXO Technician** - A graduate of the U.S. Naval Explosive Ordnance Disposal School now conducting ordnance clearance operations as a civilian

Terms, Definitions, and Safety Precautions (Continued)

- **Practice Ordnance** - Munitions used for training to simulate live explosive ordnance. Practice ordnance may contain explosive components that are used for signaling or marking munition impact. These explosive components while smaller than the explosive charge they simulate are still deadly.
- **Explosive (HE)** - Explosive-loaded ordnance includes high and low explosives of all countries. High explosives burn/detonated at rates of a few inches to 1,300 feet per second.

UXO Identification

- **Small Arms** - Projectiles that have a diameter of .50 Caliber (1/2”) or less and are fired from a pistol, rifle, or shotgun

.50 Caliber Ball Linked

Hazards: HE, Frag, Fire, and Smoke/Incendiary

UXO Identification (Continued)

- **Grenades -** Small casualty causing munitions that are hand thrown, projected, or dispersed from cargo containers

Hand Grenade MK-II High Explosives Frag

Hazards: Cocked Striker, HE, and Frag

UXO Identification (Continued)

- **Projectiles -** Munition items larger than 20mm in diameter that are fired from a smooth or rifled barrel. Projectiles are classified by "type by effect", i.e. blast, bursting chemical, HEAT, armor piercing, anti-personnel, and ejection

Projectiles ranging from 20mm and up

Hazards: EMR, HE, Frag, Movement, and Missile

UXO Identification (Continued)

- Projectiles

60mm HE M49 Mortar (New)

Hazards: HE and Frag

81mm HE M374 Mortar

Hazards: HE, Frag, Movement, and Static

60mm HE M49 Mortar (Field)

Hazards: HE and Frag

UXO Identification (Continued)

- **Rockets -** Projectiles that are propelled to the target by the burning of hot gases within the rocket motor

2.36” Rocket HEAT (BAZOOKA)

Hazards: EMR, HE, Fire, Frag, JET (Shaped Charge), and Movement

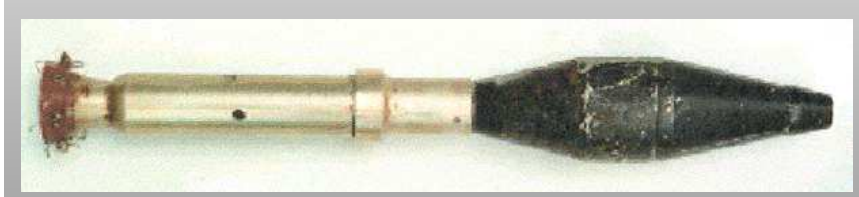

Rocket 66mm M72 LAW

Hazards: Cocked Striker, HE, Frag, JET (Shaped Charge), Lucky (Piezoelectric) and Missile

3.5” Rocket HEAT

Hazards: EMR, HE, Fire, Frag, JET (Shaped Charge), and Missile

UXO Identification (Continued)

- **Missiles -** Similar to a rocket, however the missile can be controlled or directed while in flight. Guided missiles come in a variety of sizes, from man portable and shoulder fired anti-aircraft missiles to large intercontinental ballistic missiles.

AIM-7 SPARROW Missile (Air to Air)

Hazards: EMR, HE, Frag, Fire, High Pressure (Accumulator), Mechanical, Electrical, and Missile

BGM-71 TOW (Surface to Surface)

Hazards: EMR, HE, Fire, Frag, High Pressure (Accumulator), Mechanical, Electrical, and Missile

UXO Identification (Continued)

- **Bombs -** Explosive ordnance that is dropped from aircraft, there are many different types and weights up to 20,000 pounds

500 lb MK-82 LDGP Practice Bomb

Hazards: Ejection, HE, Movement, and Smoke/Incendiary

500 lb GP Bomb (Low Order)

Hazards: HE (TNT), Frag, and Movement (Fuze)

UXO Identification (Continued)

- **Submunitions -** Delivered in cargo containers such as a projectile body or a bomb cluster unit that disperses the cargo during flight. Submunitions come in a variety of sizes and shapes.

Variety of Submunitions (Field)

Hazards: Cocked-Striker, EMR, HE, Frag, JET (Shaped Charge), Fire, Movement, and Smoke/Incendiary

UXO Identification (Continued)

- Submunitions

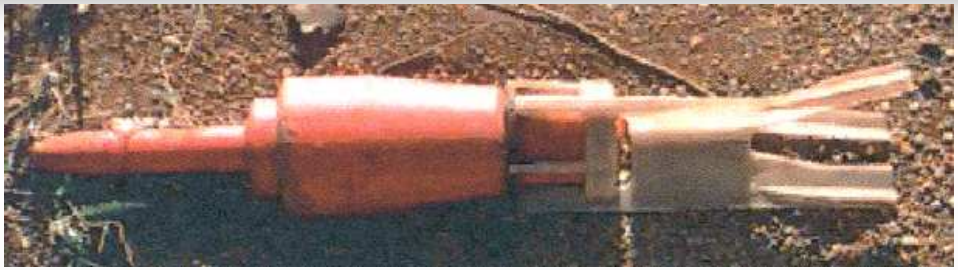

Aerial Dispersed MK118 Anti-Tank Shape Charge (Field)

Hazards: EMR, HE, JET (Shaped Charge), Lucky (Piezoelectric), and Movement

Aerial Dispersed BLU-3 Anti-Personnel Frag Bomb (New)

Hazards: HE, Frag, Movement, and Smoke/Incendiary

Aerial Dispersed BLU-26 Anti-Personnel Frag Bomb (Field)

Hazards: Cocked-Striker, Corrosive, HE, Fire, Frag, and Movement

UXO Identification (Continued)

- **Pyrotechnics and Signal Devices -** Munition items that are used for signaling, illumination, and incendiary purposes

Variety of Pyrotechnics and Signal Devices

Hazards: Ejection, EMR, HE, Frag, and Smoke/Incendiary

UXO Reporting Procedures

- Notify the Project Manager or the Site Safety Officer
  - ✓ Phone number: TBD
- Give the following information:
  - ✓ Your name
  - ✓ Your telephone number
  - ✓ Name and address of organization
  - ✓ Exact location of suspect UXO
  - ✓ Point of contact on-site or guide

UXO Reporting Procedures (Continued)

- Description of the item
  - ✓ Size - length and width
  - ✓ Color - main color plus markings
  - ✓ Features - fins, fuzes, etc.
  - ✓ Time found
- Description of the area
- Structures in the area
- Protective measures taken
- NOTE: DO NOT disturb or move a suspected UXO for the purpose of determining the above information. Only report what you have observed. For example, it may not be possible to determine the size or color of an item without disturbing it. In this case, note what you can observe without disturbing the object and report your observations.

React to Unexploded Ordnance Hazards

093-401-5040

Conditions: In a field environment, given an item(s) of simulated unexploded ordnance (UXO), marking materials, and a 9-line Explosive Hazard Spot Report (formally the UXO Spot Report).

Standards: Identify UXO by type and subgroup; recognize associated hazards; take immediate action to prevent death, injury, or damage to materiel; and report the UXO hazard using the 9-line Explosive Hazard Spot Report (formally the UXO Spot Report).

Performance Steps

1. Recognize the UXO hazard.

DANGER
Never approach any closer to a UXO once it has been identified. Approaching UXOs may cause to explode.

Never strike, jar, or touch a UXO. Do not move or remove anything on or near a suspect UXO. UXOs can be extremely sensitive and can cause serious injury or death if disturbed in any way.

Many types of UXO may contain an incendiary (fire producing), chemical, biological, or radiological hazard in addition to explosives.

Do not make radio transmissions within 100 meters of a UXO. Some types of UXO are sensitive to electromagnetic radiation (EMR) and may explode.

a. Identify the four types and subgroups of UXO.

(1) Dropped.

(a) Bombs (see figure 093-401-5040-1).

-Vary in length from 3 to 6 feet.
-Vary in diameter from 5 to 36 inches.
-Often have a sloped or "bullet" shaped nose, fins, and/or a parachute on the back.
-May contain high explosive, incendiary, or chemical fillers.

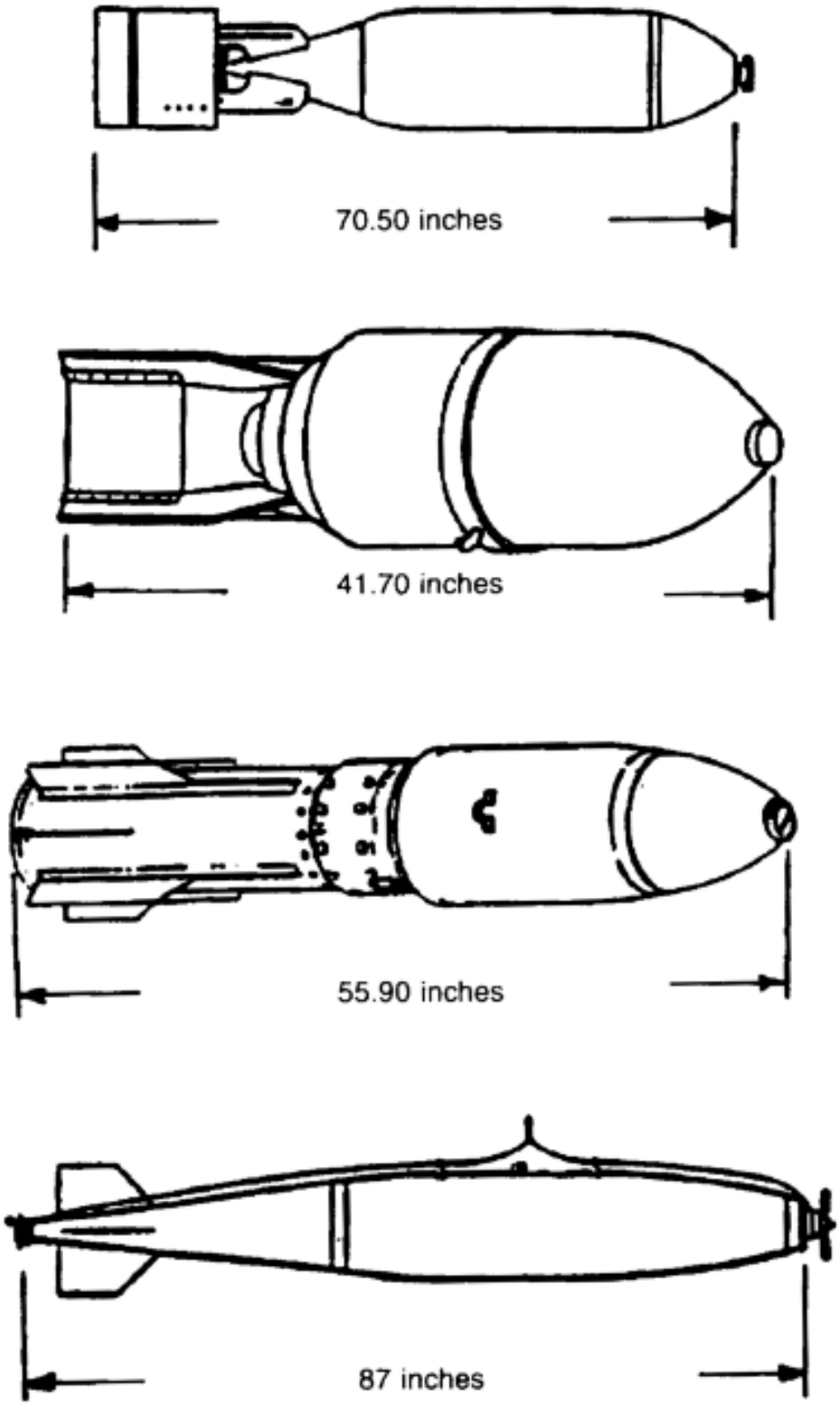

Figure 093-401-5040-1

(b) Dispensers (see figure 093-401-5040-2).

-Contain numerous submunitions or bomblets.
-Most have the same characteristics of bombs.
-May be found intact or partially open.

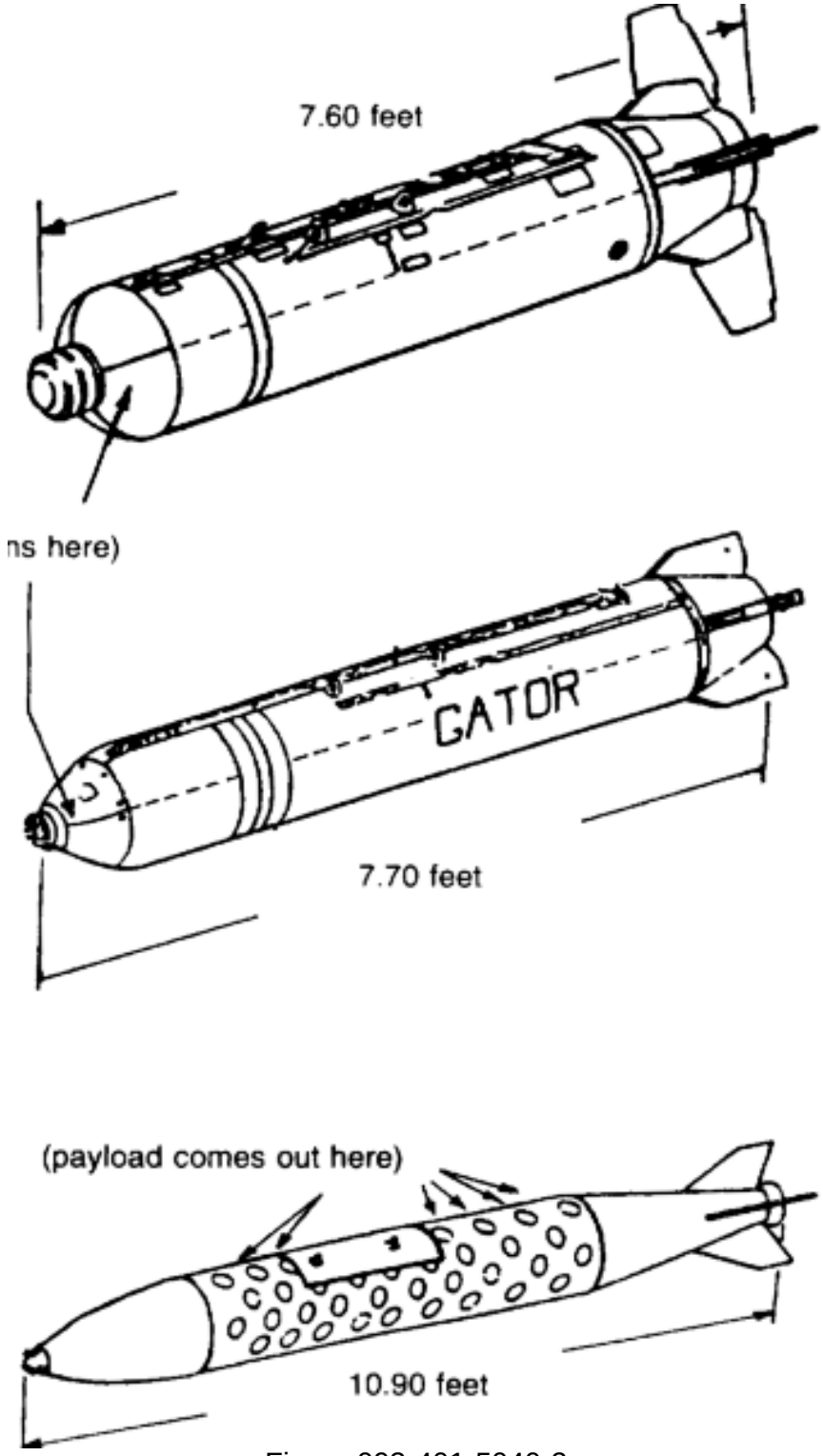

Figure 093-401-5040-2

(c) Submunitions (see figures 093-401-5040-3a through 093-401-5040-3e).
-Can contain explosive, chemical, biological, radiological, and/or incendiary hazards.
-Designed to be scattered over a wide area.
-Come in many shapes and sizes; may or may not be "bullet" shaped. May look like balls, wedges, or cylinders.
-May have fins, ribbons, parachutes, or trip wires.

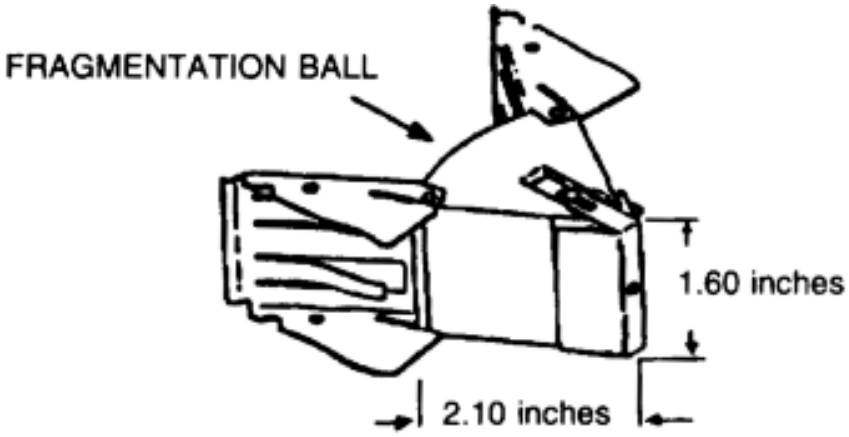

Figure 093-401-5040-3a

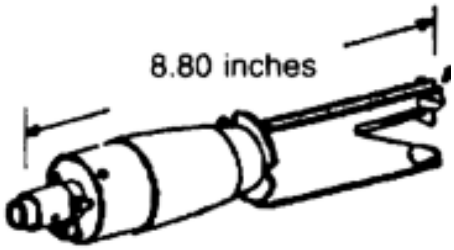

Figure 093-401-5040-3b

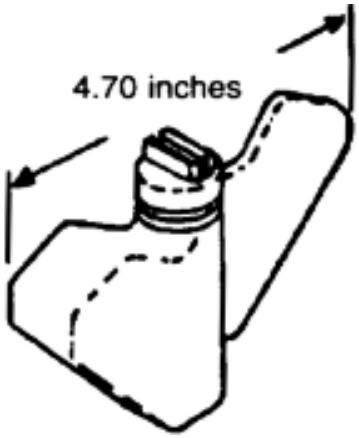

Figure 093-401-5040-3c

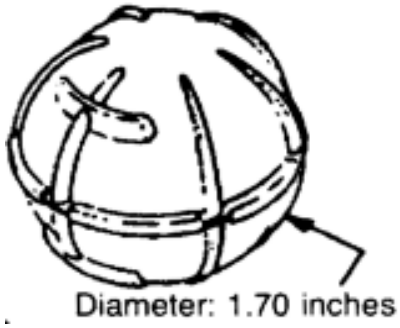

Figure 093-401-5040-3d

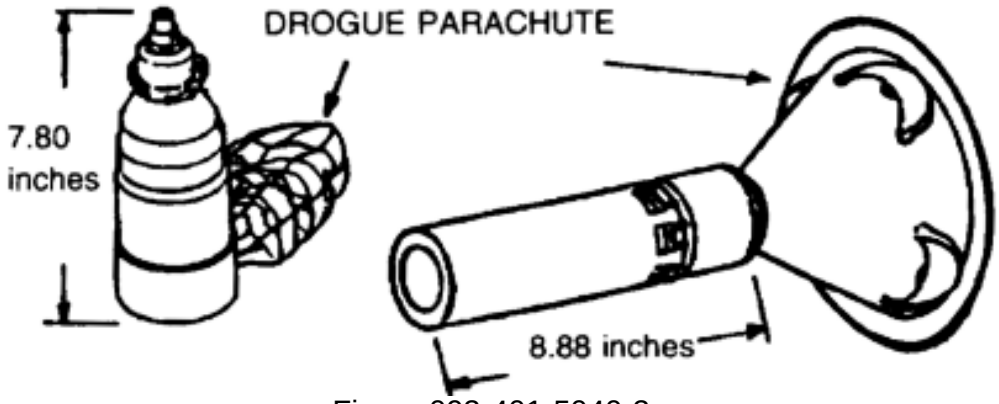

Figure 093-401-5040-3e

DANGER
When a submunition is identified, leave the area by the same path you entered. There may be many more in the immediate area.

Small size does not diminish the danger of submunitions the smallest can easily injure or kill.

(2) Projected

(a) Projectiles (see figures 093-401-5040-4a and 093-401-5040-4b).

-Includes munitions from large machine guns, artillery howitzers, and naval guns.
-Range in size from 20 mm up to 16 inches in diameter and 10 to 30 inches in length.
-Most resemble a "bullet" shape.
-Can contain explosive, chemical, biological, radiological, and/or incendiary hazards.

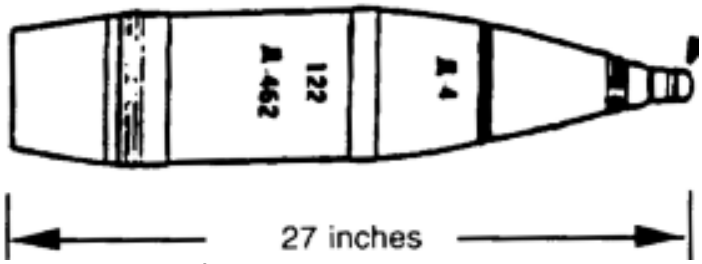

Figure 093-401-5040-4a

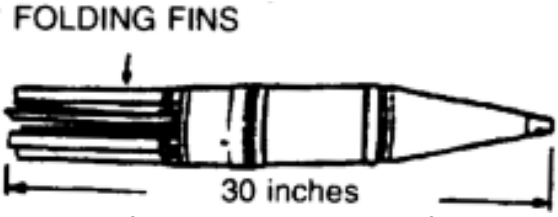

Figure 093-401-5040-4b

(b) Mortars (see figures 093-401-5040-5a and 093-401-5040-5b).

-Most have fins and have a "bullet" shape.
-Range in size from 60 mm to 120 mm in diameter and 12 to 36 inches in length.
- Can contain explosive, chemical, and/or incendiary hazards.

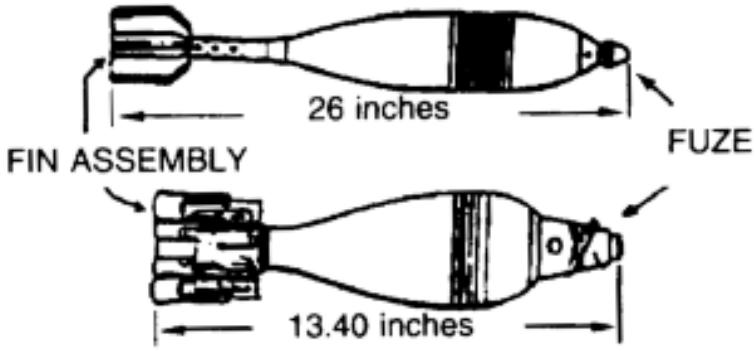

Figure 093-401-5040-5a

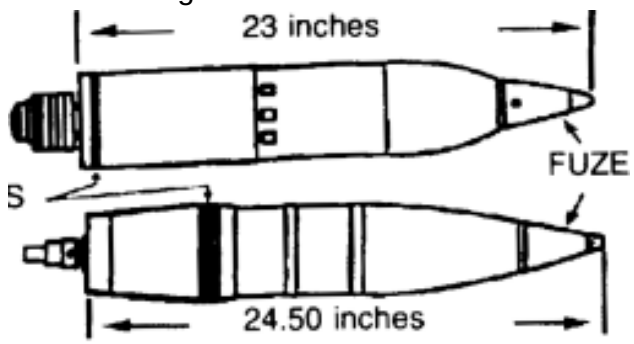

Figure 093-401-5040-5b

(c) Rockets (see figures 093-401-5040-6a through 093-401-5040-6c).
-May or may not have fins; have some sort of rocket motor vents in back.
-Range in size from 24 inches to several feet in length.
-Can contain explosive, chemical, and/or incendiary hazards.

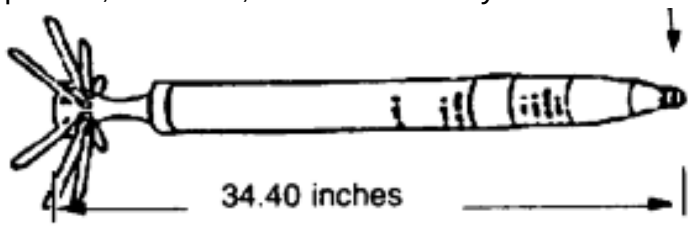

Figure 093-401-5040-6a

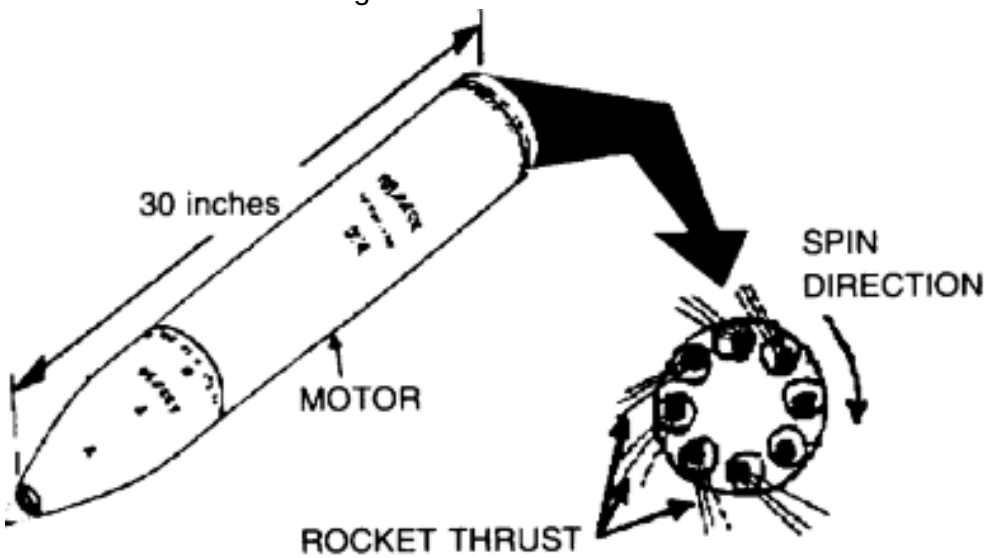

Figure 093-401-5040-6b

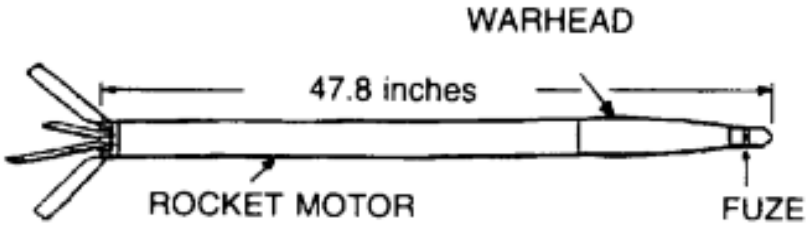

Figure 093-401-5040-6c

(d) Guided missiles (see figures 093-401-5040-7a and 093-401-5040-7b).
-Most have fins; some have wires in the end for guidance.
-Very similar to rockets.
-Can contain explosive or incendiary hazards.

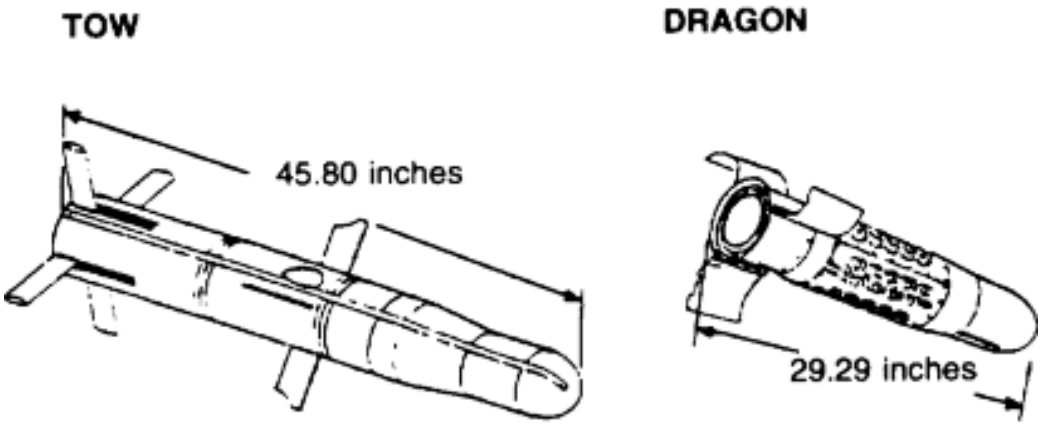

Figure 093-401-5040-7a

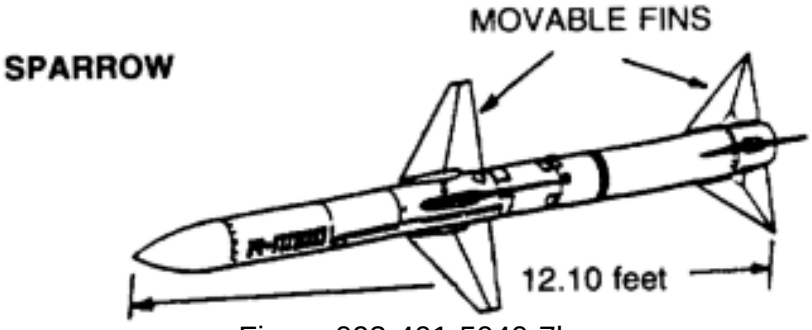

Figure 093-401-5040-7b

(e) Rifle grenades (see figures 093-401-5040-8a and 093-401-5040-8b).
-Designed to be fired from rifles or shoulder fired launchers.
-Resemble rockets but are of smaller sized.
-Can contain explosive and/or incendiary hazards.

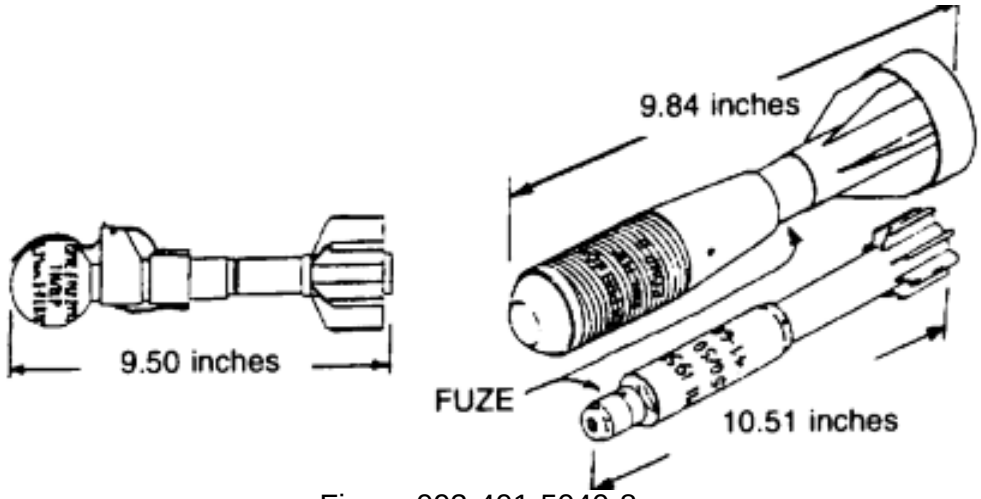

Figure 093-401-5040-8a

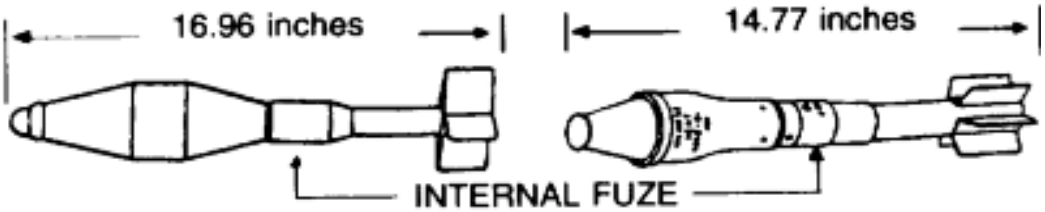

Figure 093-401-5040-8b

(3) Thrown (see figures 093-401-5040-9a and 093-401-5040-9b).

-Includes all types of grenades, including simulators.
-Most are round or cylindrical in shape and are small enough to be thrown by a person.
-Can contain explosive and/or incendiary hazards.
-Dud simulators require the same safety procedures as other ordnance.

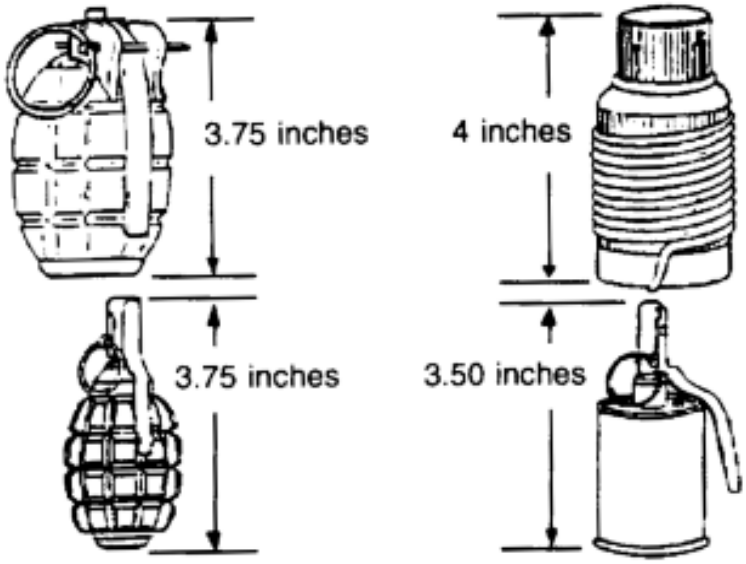

Figure 093-401-5040-9a

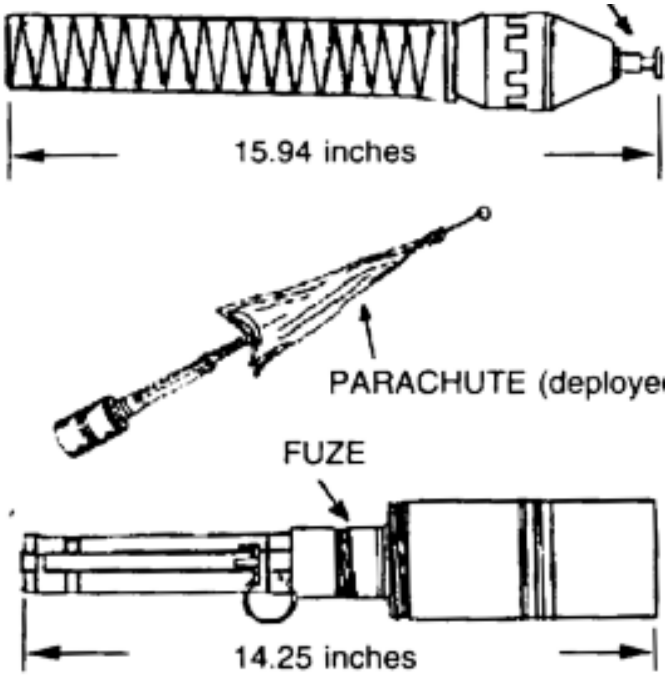

Figure 093-401-5040-9b

DANGER
Never approach a grenade that was thrown and did not detonate, even if you threw it. Do not move, jar, or disturb as the fuze may function at any time.

Never pick up, move, or disturb a found grenade, even if the spoon or safety pin is attached. It may be booby trapped to explode when disturbed.

(4) Placed (see figures 093-401-5040-10a and 093-401-5040-10b).

-Includes all land or sea mines.
-Range in size from 2 inches in diameter to several feet in length.
-Have a variety of fuze types pressure plates, tilt rods, trip wires, electronic sensors, or command detonated.
-Can contain explosive, incendiary, or chemical hazards.

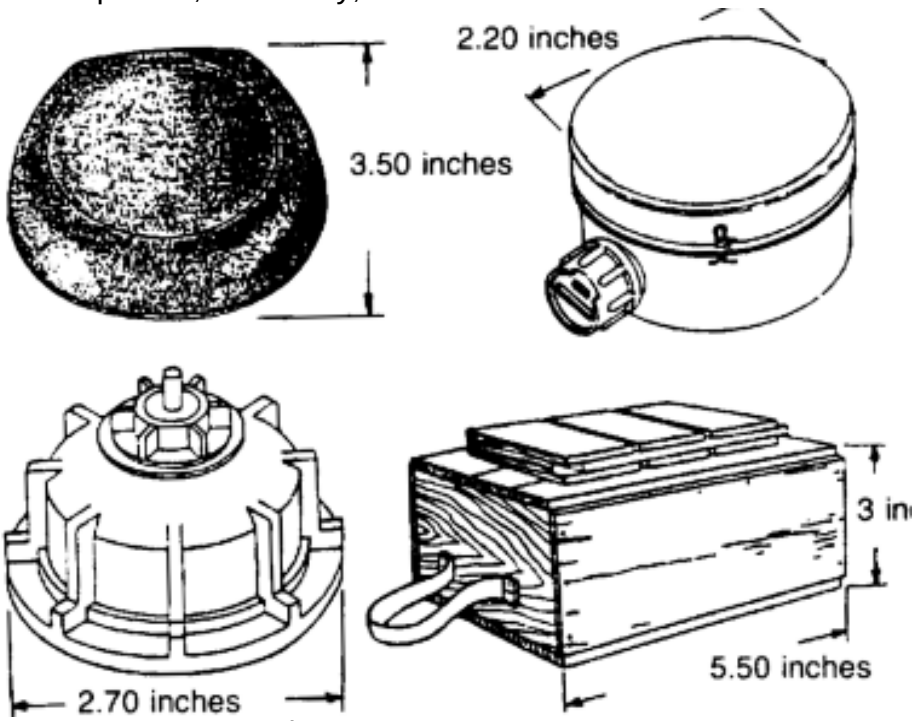

Figure 093-401-5040-10a

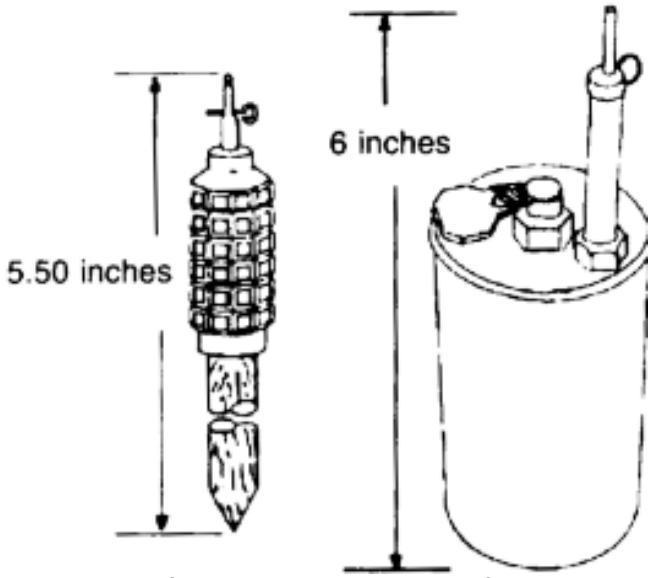

Figure 093-401-5040-10b

DANGER
Consider all mines to be booby trapped or have antidisturbance fuzing. Never attempt to uncover or remove placed ordnance.

2. React to the UXO hazard.
   a. Do not touch or disturb the UXO or any wires, parachutes, or anything attached or surrounding the UXO. Do not move any closer to the UXO.
   b. If any peculiar smells, liquids, or dead animals are present, chemical or biological agents may be present; don mask and MOPP gear immediately.

3. Mark the UXO hazard.
   a. Mark the location (without approaching any closer) with some sort of recognizable material (such as white engineer tape, marking ribbon, clothing, or signs).
   b. Place marker above ground at waist level if possible. Note physical terrain features of the location and route back to the UXO in order for the EOD team to return to dispose of the UXO.

4. Determine appropriate evacuation distance.
   a. Evacuate personnel and equipment from the area surrounding the UXO:
      (1) For bombs, dispensers, large projected munitions (90-mm diameter and larger), evacuate a 360-degree perimeter at least 600 meters.
      (2) For submunitions, placed, thrown, small projected munitions (smaller than 90-mm diameter), evacuate a 360-degree perimeter at least 300 meters.
   b. If personnel or equipment cannot be evacuated, seek as much frontal and overhead cover as possible.
   c. If UXO is suspected to have a chemical agent, ensure all personnel stay upwind of the item and are in full MOPP.

5. Report the UXO hazard.
   a. Report UXO hazard to your chain of command. You or your chain of command should request Explosive Ordnance Disposal (EOD) support using the nine-line Explosive Hazard Spot Report (formally the UXO Spot Report):
      (1) Date and time of the fall, impact, or finding of the UXO item(s).
      (2) The exact location of item(s) including grid coordinate (8-digit minimum), landmarks, reference points, or street addresses.
      (3) The name and organization of person reporting the incident including call sign or phone number.

(4) Identify UXO by type (dropped, projected, thrown, placed) and subgroup.
(5) Any CBRN contamination present?
(6) What resources are threatened?
(7) How the UXO has affected unit mission.
(8) The safety measures that have been taken including the evacuation distances that have been accomplished.
(9) The requested priority for receiving EOD support (immediate, indirect, minor, no threat).

b. Be prepared to provide a guide for to the EOD team.

Evaluation Preparation: Setup: Do not evaluate this task using live UXO. Use training items from your local installation training support center. Preliminary instruction of this task can be obtained by requesting support from the nearest Army EOD company. Evaluate this task during any training exercise where UXO is likely to be encountered. Place UXO training aid near personnel, facilities, or equipment (within the Soldier's area of responsibility). Soldier should identify UXO from a distance of 5 to 10 meters away or by using binoculars.

Brief Soldier: Tell the Soldier that he or she will be evaluated on his or her ability to properly recognize, react, mark, and report a UXO hazard and also determine the appropriate evacuation distance. The Soldier will identify the UXO by type and subgroup, take appropriate actions to react to the hazards, and report the hazard using the nine-line Explosive Hazard Spot Report (formally the UXO Spot Report).

Performance Measures	**GO**	**NO-GO**
1. Recognized the UXO hazard.	___	___
2. Reacted to the UXO hazard.	___	___
3. Marked the UXO hazard.	___	___
4. Determined appropriate evacuation distance.	___	___
5. Reported the UXO hazard.	___	___

Evaluation Guidance: Score the soldier GO if all performance measures performed correctly. Score the soldier NO GO if any performance measure is not performed correctly. If the soldier scores NO GO, show the soldier what was done wrong and how to do it correctly.

References

Required	**Related**
FM 21-16	
GTA 9-12-1	

LANDMINES

INTRODUCTION:

- Landmines are emplaced area-denial weapons, from small antipersonnel (apers) types to larger antitank (AT) or special-purpose types (off-route).
- Landmines may be designed to be boobytrapped with anti-lift devices.
- Landmines may be loaded with high explosives, chemicals, or pyrotechnic materials.
- Fuzed in a variety of ways, including mechanical, electrical, chemical, acoustic/seismic, infrared, magnetic-influence, or controlled firing systems. They may be fired by pressure, tripwire, tension release, explosive pressure pulse, pressure release, magnetic field changes, or direct electrical circuit closure.

SAFETY:

- Observe magnetic precautions when approaching/working with a known or suspected magnetic influence fuze.
- If it is absolutely necessary to walk into a mined area, move slowly, looking at the ground carefully to note disturbances in the soil and the presence of any tripwires.
- Permit only one person at a time to work on one mine.
- Probe and examine the ground around a mine before starting to work on it.
- Take boobytrap precautions.
- Before lifting a mine, neutralize all external fuzes.
- Perform all initial movement of the mine remotely.
- Assume the presence of other mines nearby whenever a landmine is located.
- Before disarming, determine the number and types of fuzes within the mine to ensure proper safety precautions are followed.
- A nonmagnetic probe is safer to use, as the mine may have a magnetic fuze.
- AT mines may be protected by apers mines.
- Do not manually disturb, drop, or strike an armed mine or mine fuze. It may contain a cocked-striker firing system.
- Consider an emplaced landmine armed and remove remotely.
- Do not cut/pull a taut wire; never pull a slack one.
- Take cover before pulling a mine and wait for at least 60 seconds.
- Do not handle an AT mine that has been pulled from its emplacement until after closely examining the mine case to ensure that the case was not deliberately altered to permit separation at its base. Separation of the mine case from its base and main charge will function an internal pressure/pressure-release fuze.
- Do not use force on a mine or boobytrap. If a part cannot be removed without applying an undue amount of force, cease removal procedures and destroy the mine in place.
- If a mine or boobytrap must be left unlifted, mark the location prominently and notify the proper authorities.
- Improvised grapnels may be used to clear tripwire-actuated mines.
- When cutting the wires of an electric detonator, cut and tape them one at a time to avoid closing the circuit with the wire cutters. A mine is harmless if the firing train is broken, but there may be more than one firing train.
- Do not stack fuzed mines. Many types contain pressure-actuated fuzing which may be fired by such action.
- If possible, destroy in place all mines loaded with picric acid explosive. Extremely sensitive explosive salts may have formed wherever the explosive contacts the metal.
- Observe acoustic/seismic precautions when approaching or working on landmines with a known or suspected acoustic/seismic fuze.
- Do not remove a mine from its emplacement if the pressure plate is compressed or deformed. The fuze may contain a hung cocked firing pin.

SAFETY - Continued:

- The preferred disposal procedure for antipersonnel and antitank landmines is to detonate or burn using incendiary grenades for the situation found.
- Do not permit personnel, vehicles, or any heat-generating source in front of or to pass between an infrared source and receiver in front of the ordnance;
- Some fuzes may not have a safety feature, or a safety device may not be available or cannot be applied.

EOD CONSIDERATIONS

ANTI-TANK (AT) MINES:

- Do not uncover until the ground has been thoroughly checked for anti-lift devices. Probe cautiously, for even nearby disturbance by the probe may release the fuze striker.
- Do not remove the pressure plate from a metallic AT mine unless the mine can be positively identified as one that is not fitted with a pressure/pressure-release fuze.
- Exercise care when disarming wooden AT mines by hand. Frequently, holes are drilled through the bottom of the case and pull-wires connected to auxiliary fuzes are threaded and anchored to a stake underneath. If the stake is driven deep enough, it is not easy to locate the wire by probing. A pressure-release fuze or pull fuze with pullwire may be actuated by raising or removing the pressure plate or lid. Some wooden mines have a special mousetrap device that is actuated in this way.
- Exercise care with wooden AT mines that have been buried for a long time. Because of soil conditions, the wood deteriorates and the slightest inadvertent pressure on the top may initiate the fuze.

ANTIPERSONNEL:

- Neutralize apers mines by replacing all safety pins, if possible, before lifting the mines.
- Exercise care when hand-disarming apers mines with tripwire actuation. Before cutting tripwires, trace them from mine to anchor (often the anchor may be another mine).
- Be alert for small apers mines laid along the side of or underneath the tripwire to hinder disarming.
- Always trace the tripwire from the friendly side - do not straddle it - as a safeguard against accidental tripping or stepping on a small apers mine laid underneath the tripwire.
- If possible, insert a safety pin in the fuze before cutting the tripwire.

OFF-ROUTE:

- Electronic off-route mines contain an anti-handling option.
- Contact with fuzing sensor or into field of view may initiate.
- Do not cut electric wires/breakwires connected – collapsing circuit.
- Precautions to prevent formation of HEAT jet or self-forging fragment.

FUZES:

- Be extremely cautious disarming tilt fuzes by hand, especially if they have been partially initiated. There must be no movement of the tiltrod when the fuze is removed from the mine.
- Use extreme caution disarming belleville-spring-type fuzes by hand, as they may be partially initiated by contact or blast, and a slight jar or movement will set off the mine.

References 60A-1-1-22

IRAQI FUZE, MINE, MODEL UNKNOWN

H-57-5-1

Ordnance used with:

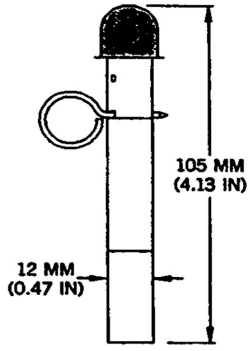

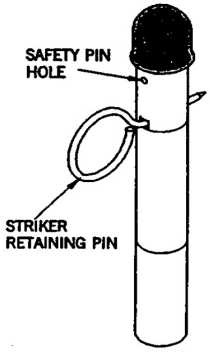

CANADIAN LANDMINE, APERS, C-3A1 (ELSIE)

H-5-2-1

Ordnance used with:

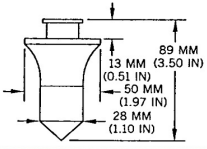

SHIPPING CAP

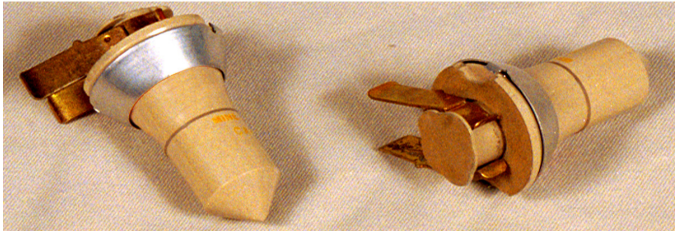

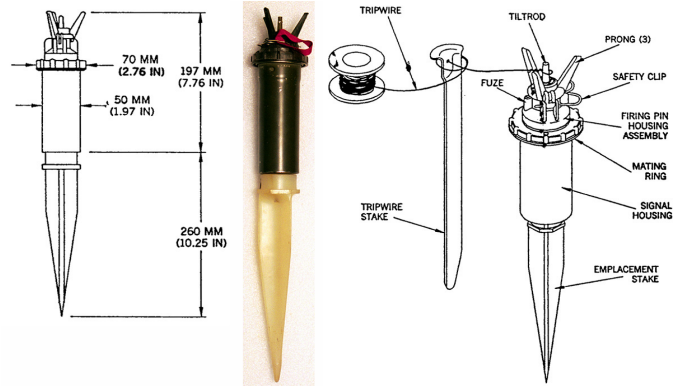

- ITALIAN LANDMINE, ILLUMINATION, VS-T
-
-
- **H-9-2-9**

Ordnance used with:

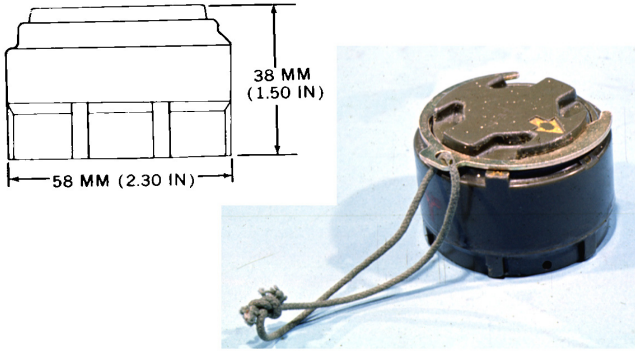

- U.S. LANDMINES, APERS, HE, M14 & M14E1; & LANDMINE, APERS, PRACTICE, M17
-
-
- **H-2-2-27**

Ordnance used with:

U.S.S.R. LANDMINE: APERS, POMZ-2

H-35-2-22

Ordnance used with:

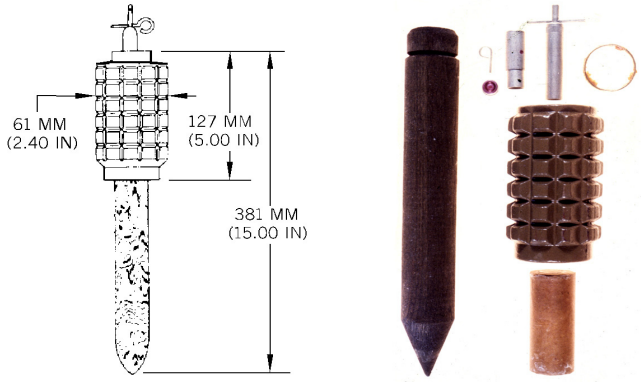

U.S.S.R. LANDMINE: APERS, POMZ-2M

H-35-2-22

Ordnance used with:

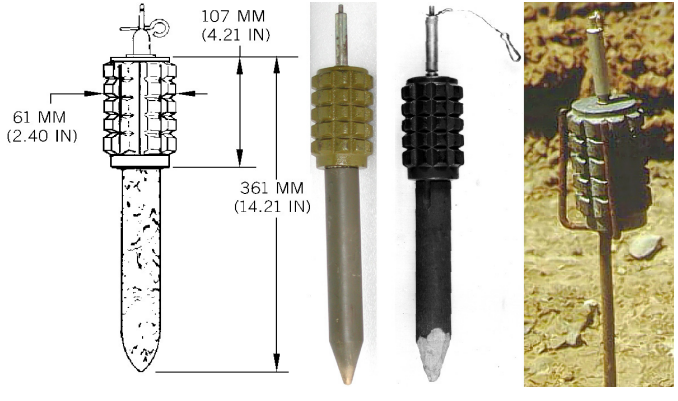

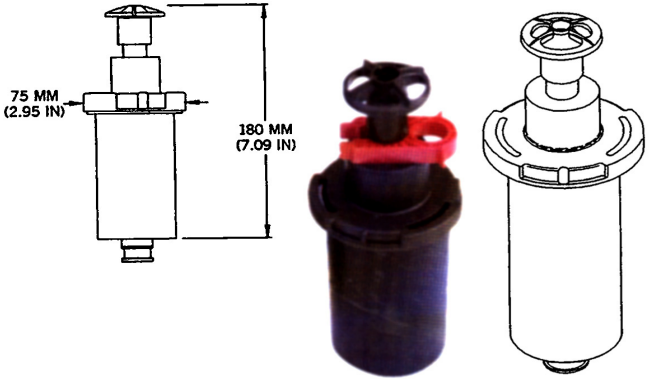

- ITALIAN LANDMINE, APERS, P-25 (W/TYPE 2 FUZE)
-
-
- **H-9-2-10**

Ordnance used with:

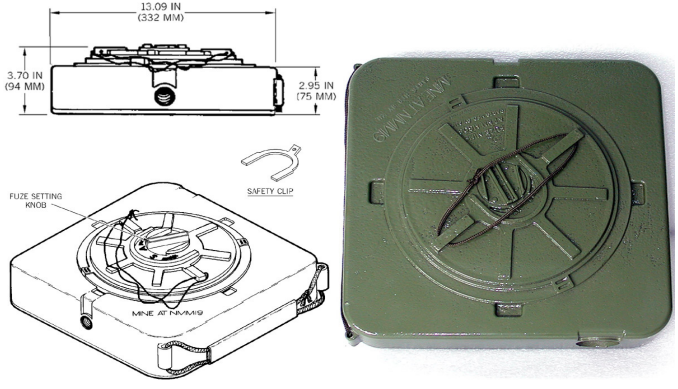

- U.S. LANDMINES: AT, HE, NONMETALLIC, M19; INERT, M19; AND TRAINING, M80
-
-
- **H-2-2-23**

Ordnance used with:

- CHINESE LANDMINES, APERS, TYPES 72, 72B, AND 72C

H-17-2-4

Ordnance used with:

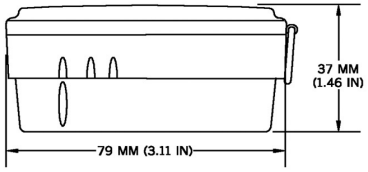

- ITALIAN LANDMINE, APERS, P-25 (W/TYPE 1 FUZE)

H-9-2-10

Ordnance used with:

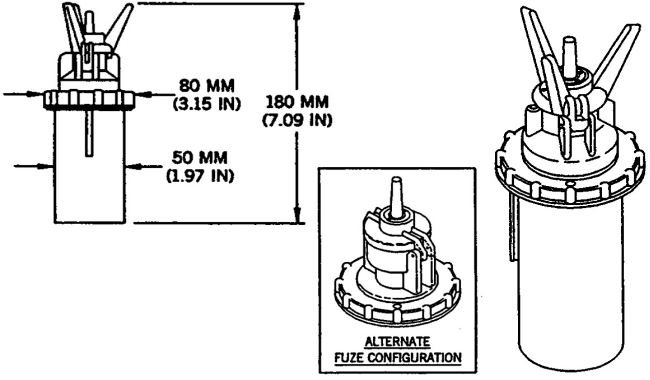

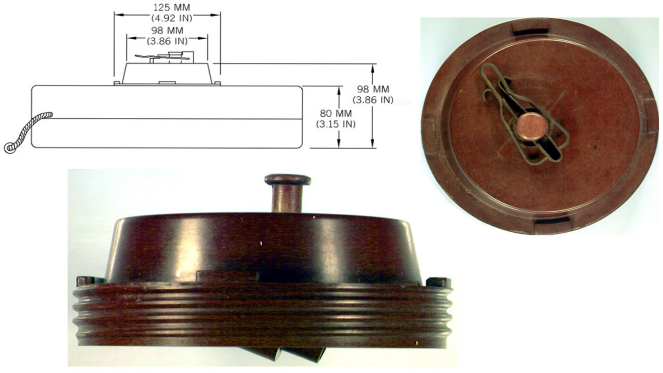

- ROMANIAN LANDMINE FUZE, AT, P-62
-
-
- **H-29-2-2**

Ordnance used with:
FUZE: P-62, PRESSURE

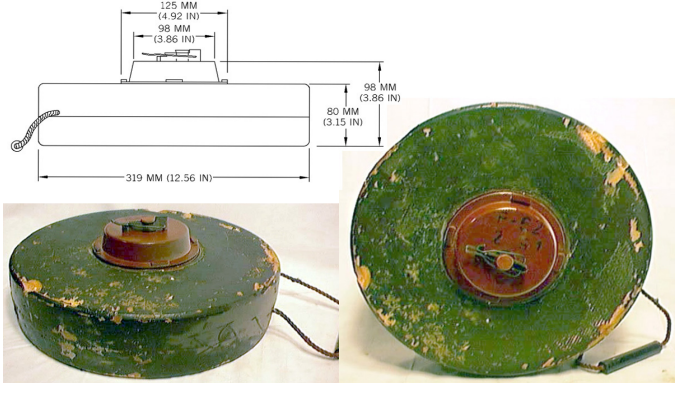

- ROMANIAN LANDMINE, AT, MAT-76
-
-
- **H-29-2-2**

Ordnance used with:
FUZE: P-62, PRESSURE

U.K. LANDMINE, AT, L9A1 (BARMINE)

H-3-2-10

Ordnance used with:

BELGIAN LANDMINE, APERS, PRB-BAC H-28

H-4-2-3

Ordnance used with:

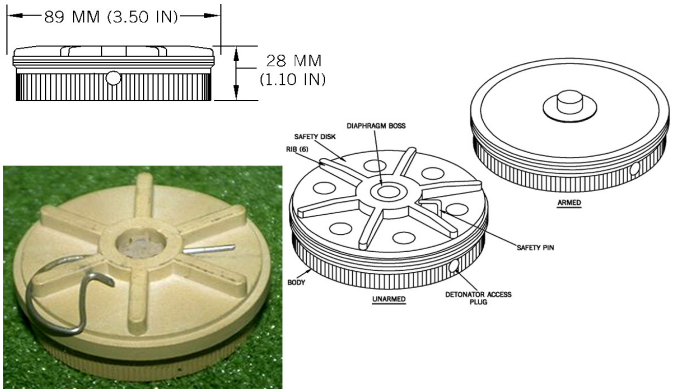

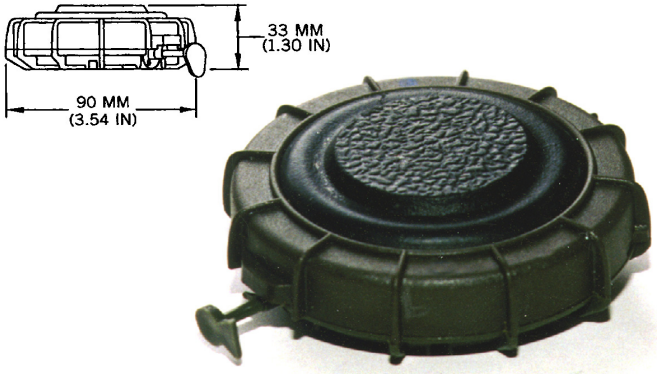

- ITALIAN LANDMINE, APERS, VS-MK 2 AND VS-MK 2 AR-AN
-
-
- **H-9-2-6**

Ordnance used with:
LAUNCHER: GRILLO

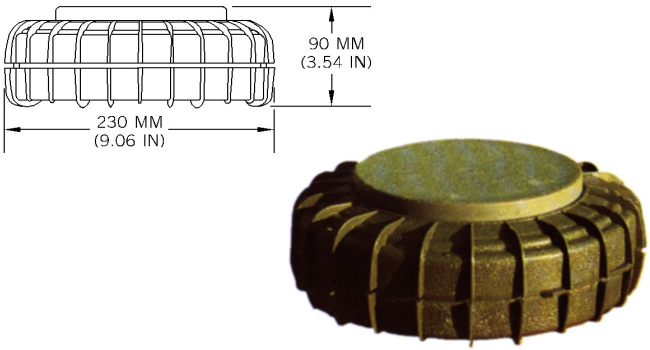

- ITALIAN LANDMINES, AT, SB-81 AND SB-81/AR
-
-
- **H-9-2-24**

Ordnance used with:

- U.S.S.R. LANDMINES, AT, TM-46 AND TMN-46; AND TRAINING, UITM-46

H-35-2-21

Ordnance used with:

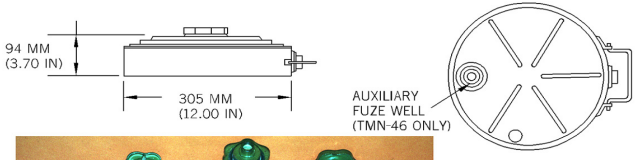

- CHINESE (PEOPLE'S REPUBLIC) LANDMINE, AT, TYPE 72

H-17-2-5

Ordnance used with:

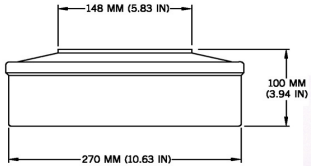

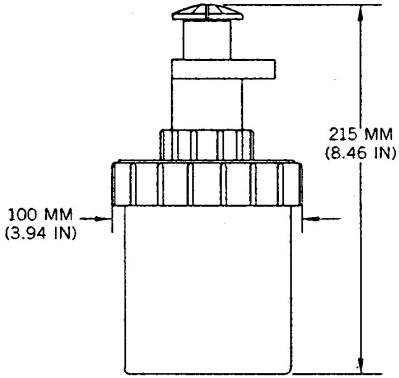

- ITALIAN LANDMINE, P-40 TYPE 2
-
-
- **H-9-2-27**

Ordnance used with:

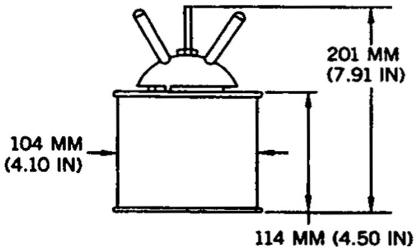

- ITALIAN LANDMINES, APERS, VALMARA AND VALMARA 59
-
-
- **H-9-2-15**

Ordnance used with:
ANTILIFT DEVICE: VS-AR4

- U.S. LANDMINES, APERS, HE, M16 AND M16A1; AND
- LANDMINES, INERT, M16 AND M16A1

H-2-2-30

Ordnance used with:

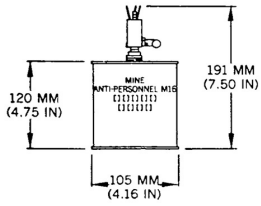

- ITALIAN LANDMINES, APERS, VALMARA 69 PRACTICE,
- VALMARA 69

H-9-2-15

Ordnance used with:

ANTILIFT DEVICE: VS-AR4

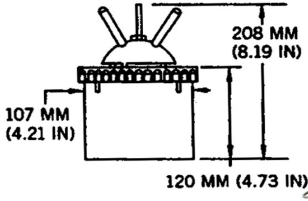

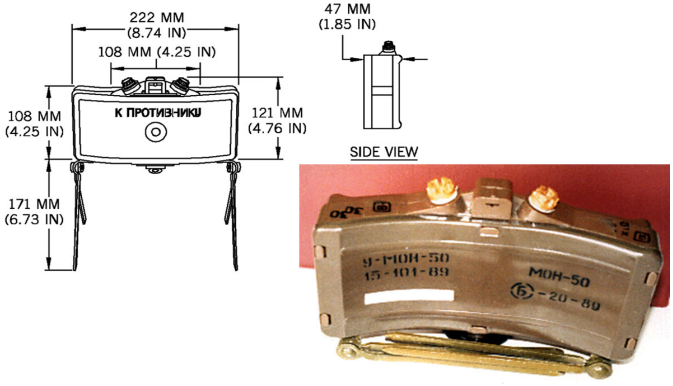

- U.S.S.R. LANDMINE, APERS, FRAG, MON-50
-
-
- **H-35-2-8**

Ordnance used with:

CONTROL DEVICE: VP-13

ELECTRIC MINE FUZE: MVZ-72

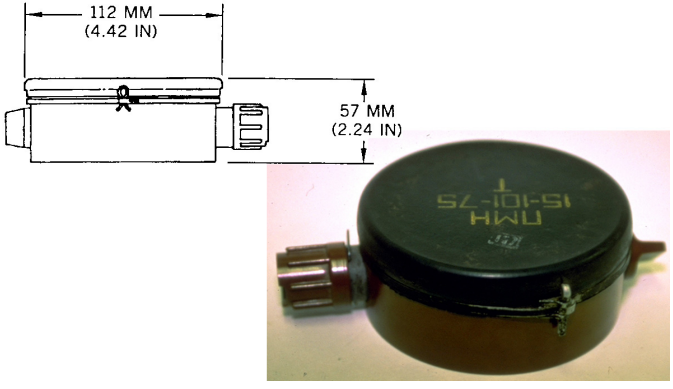

- U.S.S.R. LANDMINE, APERS, PMN
-
-
- **H-35-2-7**

Ordnance used with:

GERMAN (PEOPLE'S REPUBLIC) LANDMINES, APERS, PPM-2;
AND PRACTICE, PPM-2 UB

H-21-2-4

Ordnance used with:

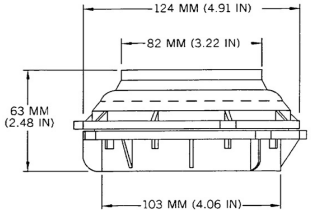

AUSTRIAN LANDMINE, AT, OFF-ROUTE, ATM-6

H-15-2-7

Ordnance used with:

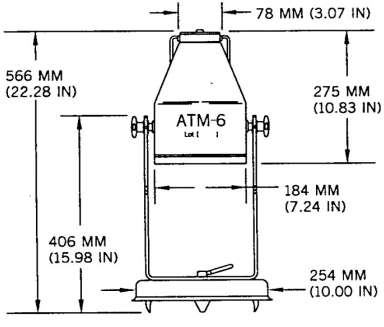

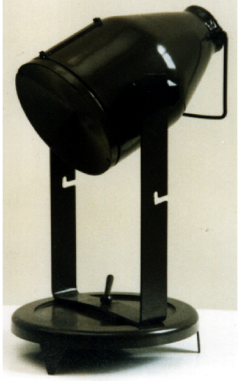

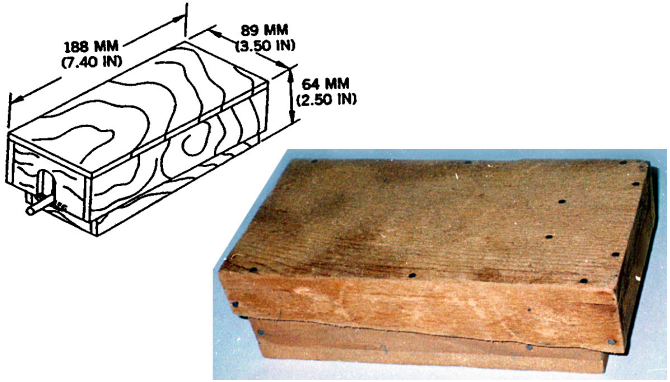

- U.S.S.R. LANDMINES, APERS, PMD-6 AND PMD-6M
-
-
- **H-35-2-19**

Ordnance used with:
U.S.S.R. MINE FUZE: MUV-4

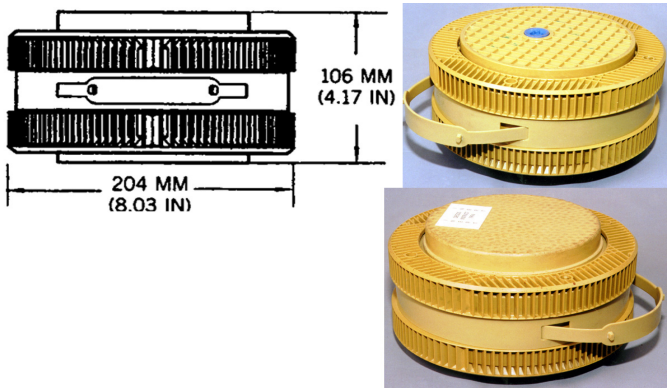

- ITALIAN LANDMINE, AT, TC/2.4
-
-
- **H-9-2-8**

Ordnance used with:

CHINESE LANDMINE, APERS, CLAYMORE, TYPE 66

H-17-5-4

Ordnance used with:

ITALIAN LANDMINE, AT, VS-HCT

H-9-2-25

Ordnance used with:

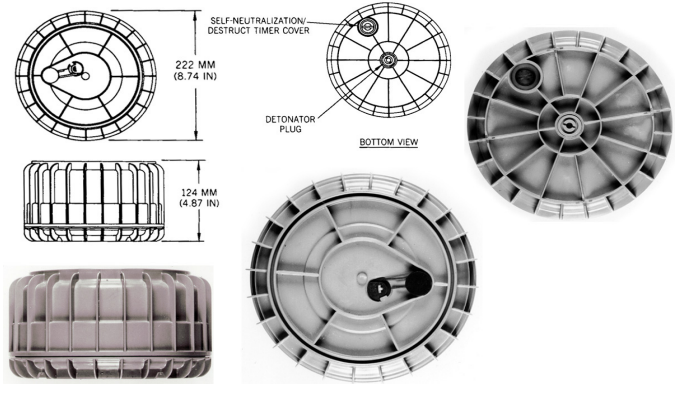

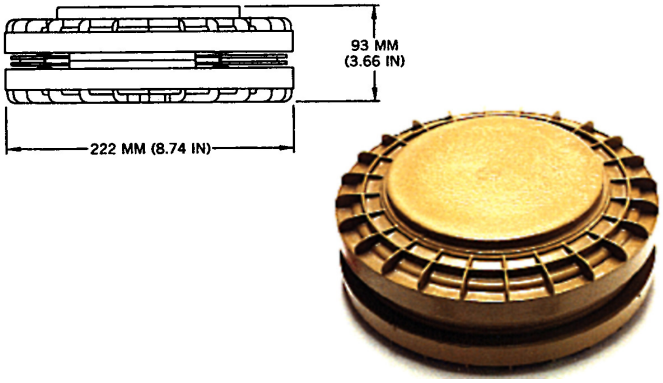

- SINGAPORE LANDMINE, AT, VS 1.6
-
-
- **H-63-5-1**

Ordnance used with:

- U.S. LANDMINE, AT, HE, M21
-
-
- **H-2-2-36**

Ordnance used with:

- BELGIAN LANDMINE, AT, PRB-ATK-M3
-
-
- **H-4-2-9**

Ordnance used with:

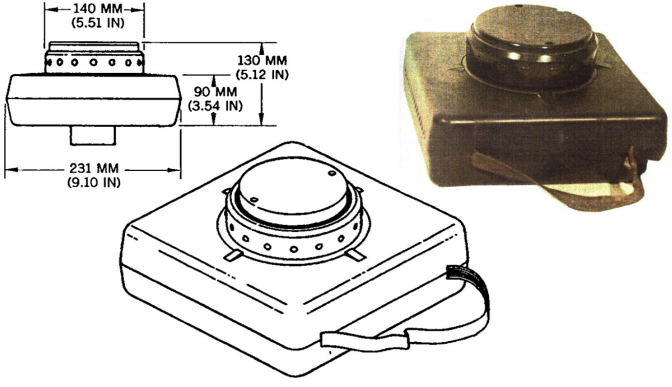

- ITALIAN LANDMINE, SB-MV/1
-
-
- **H-9-2-5**

Ordnance used with:

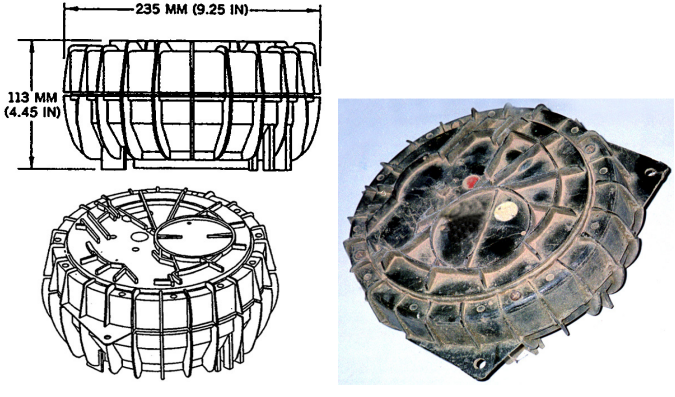

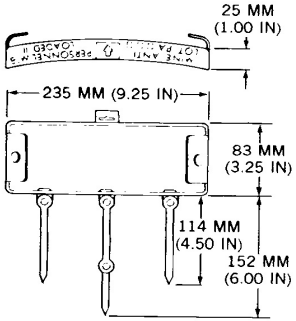

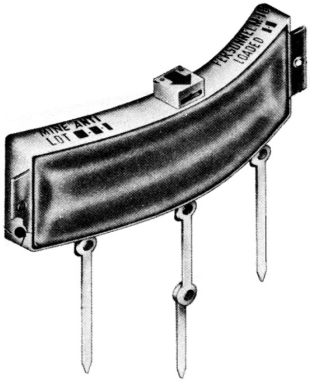

- U.S. LANDMINE, APERS, HE, M18
-
-
- **H-2-2-31**

Ordnance used with:

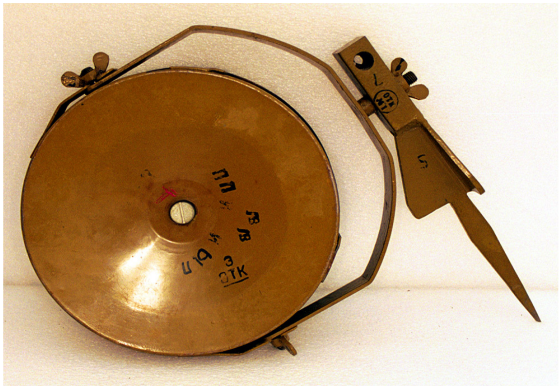

- U.S.S.R. LANDMINE, APERS, MON-100
-
-
- **H-35-2-4**

Ordnance used with:
U.S.S.R. FUZE: MUV-4

ITALIAN LANDMINE, AT, VS-HCT2 (MOD 1)

H-9-2-19

Ordnance used with:

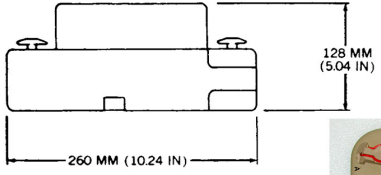

ITALIAN LANDMINE, AT, ELECTRONIC, TCE/6

H-9-2-31

Ordnance used with:

FUZE: ELECTRONIC, MODEL UNKNOWN

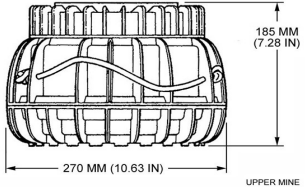

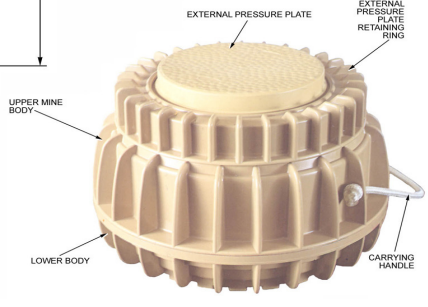

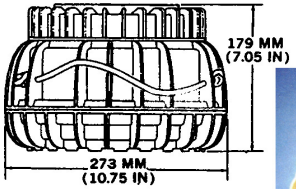

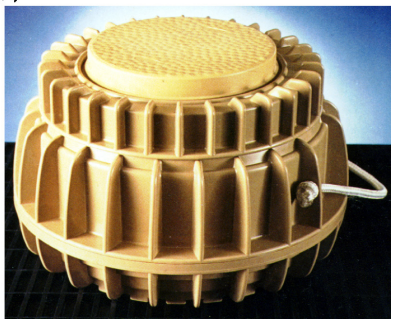

- ITALIAN LANDMINE, AT, MODEL TC-6
-
-
- **H-9-2-7**

Ordnance used with:

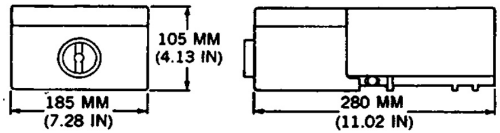

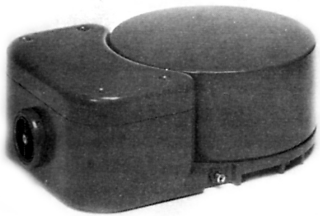

- FRENCH LANDMINE, AT, HPD F2
-
-
- **H-7-5-7**

Ordnance used with:

- U.S.S.R. LANDMINE, AT, TM-57
-
-
- **H-35-2-5**

Ordnance used with:

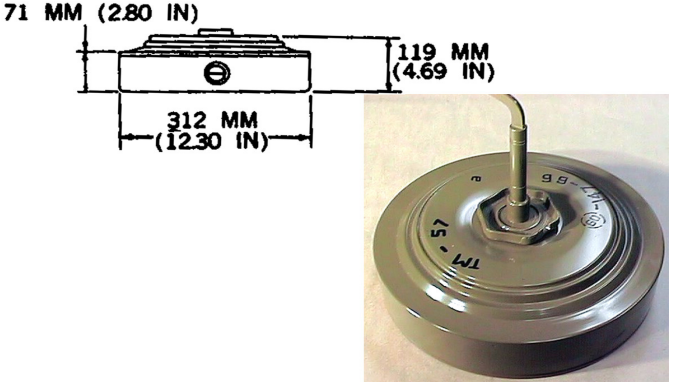

- U.S.S.R. LANDMINE, AT, TM-62M
-
-
- **H-35-2-12**

Ordnance used with:

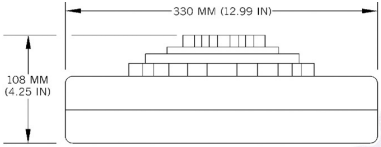

- CZECHOSLOVAK LANDMINES, AT, PT-MI-BA III AND PRACTICE, BT-MI-BA III
-
-
- **H-20-2-17**

Ordnance used with:

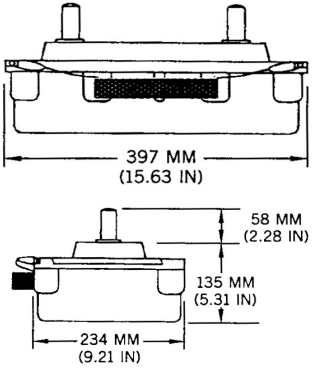

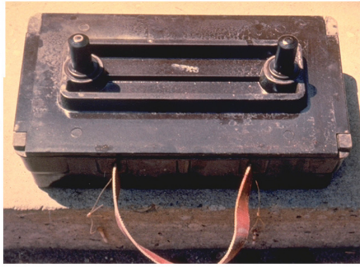

- CZECHOSLOVAK LANDMINE, AT, PT-MI-BA II
-
-
- **H-20-2-13**

Ordnance used with:

U.S.S.R. LANDMINE, APERS, MON-200

H-35-2-4

Ordnance used with:

U.S.S.R. FUZE: MUV-4